AUSTRON INC.
a DATUM company
P. O. BOX 14766 AUSTIN, TX 78761 ■ TEL (512) 251-2313 ■ FAX (512) 251-9685

AUSTRON Model 2201A
GPS Satellite Receiver
Unit Serial No._____
Maintenance Manual
P/N 12712778-000-2, Revision C

July 6, 1995

Table of Contents

List of Tables

List of Drawings

1. Functional Description

1.1. Scope Of Section

Section One discusses the operation of the Model 2201A GPS Satellite Receiver. Included are schematics, detailed circuit descriptions and assembly drawings. In Section Two you will find detailed discussions of the Model 2201A GPS test and calibration procedures. These two sections are of interest to those persons interested in the operation of the receiver for maintenance and/or calibration purposes. For the option modules (I/O and Oscillator) refer to the manual supplements for circuit descriptions, schematics and assembly drawings.

1.2. Basic Operation

Dwg. No. 12411319 shows the block diagram of the Model 2201A GPS Satellite Receiver. The general flow begins at the left with the antenna.

The antenna receives, amplifies and filters the GPS signals. Using the reference frequency from the receiver, it generates the first local oscillator frequency and mixes it with the amplified and filtered RF to create the first intermediate frequency (first IF). The first IF is amplified and filtered at the antenna, then sent to the receiver. Connection between the antenna and the receiver is through a length of RG58 cable, with 15 volt power and the 10 MHz reference going to the antenna and the first IF coming from the antenna.

The antenna cable connects to the Antenna Interface module, plugged into the rear panel of the receiver. In this module (the down converter in the block diagram) the first IF is mixed with the second local oscillator frequency, which is phase modulated by the C/A code of the satellite being tracked. The second IF is amplified and filtered, then mixed with the third local oscillator frequency to generate the third IF. The third IF is amplified and filtered and sent to the Signal Processor PCB.

On the Signal Processor PCB, the third IF passes through an automatic gain control circuit, which allows the receiver to maintain a constant level during tracking. The signal is then mixed with a final signal which removes the third IF and the Doppler, leaving only the data. The signals that result from this are in phase and quadrature signals that are converted to binary numbers for use in the software. The software processes these numbers to produce corrections to the final LO, generated by the NCO (number-controlled-oscillator), and corrections to the phase of the C/A code. The software also collects the satellite data, one bit at a time, and sends it to the Data Processor PCB.

The activity of the Signal Processor PCB is controlled by the Signal Controller PCB which contains a 68010 microprocessor, 16 Kbytes of EPROM, 4 Kbytes of dual port RAM and the C/A code generator circuitry. Information from the Data Processor passes through the dual port RAM to the microprocessor. This information tells the Signal Controller what satellites to track and how long to track each one. Using this information, the software controls the Signal Processor hardware, and causes it to acquire and track up to eight satellites chosen by the Data Processor. It then sends satellite data and status information back to the Data Processor through the dual port RAM.

The Data Processor PCB is the main controller in the Model 2201A. It interfaces with the User through the keyboard and liquid crystal display, it interfaces with external instruments through various optional modules (i.e., IEEE-488, RS-232, etc.) and it interfaces with the Signal Controller PCB. The Data Processor consists of a 68010 microprocessor, 512 Kbytes of erasable programmable read-only memory (EPROM), 256 Kbytes of static memory (RAM),

4 Kbytes of battery-backed RAM and a time-interval-counter. Data from the Signal Controller is processed and used to generate an on-time 1 pps, to correct the frequency of the internal oscillator and to calculate the position of the receiver. Measurements of the accuracies of an external 1 pps and an external frequency can also be made. In addition, the Data Processor monitors various conditions in the receiver, enabling alarms when necessary.

REVISIONS				
ZONE	LTR	DESCRIPTION	DATE	APPD
	B	REDRAWN PER ECO 13293	11/20/91	
	C	REVISED PER ECO 13719	1/23/92	

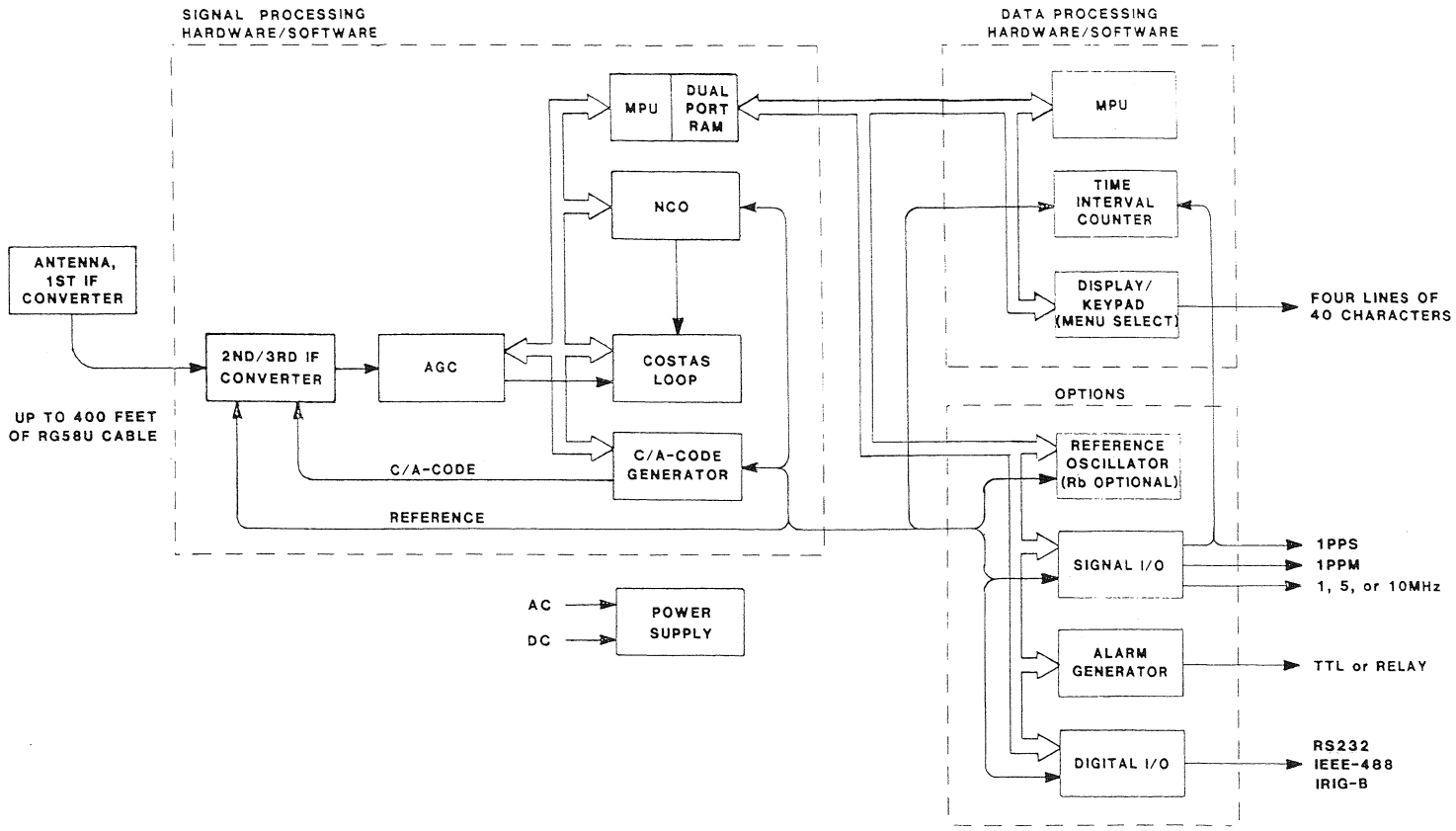

NEXT ASSY	USED ON	REF DES	FIG NO.
	2201A		
	2201		
	2200		

APPLICATION

TOLERANCES UNLESS OTHERWISE SPECIFIED

DEC	FRAC	ANG

MATERIAL:

Q.A.		
ENGR		
CHECK		11/20/91
DRAWN		5NOV91

AUSTRON INC. AUSTIN, TEXAS

BLOCK DIAGRAM-
GPS RECEIVER, 2200/2201/2201A

SIZE	CODE IDENT NO.		REV
2	2 3 !	12411319	C

SCALE NONE

SHEET 1 OF 1

1.3. Circuit Configuration

1.3.1. Hardware Arrangement

Dwg. No. 25412779 illustrates the arrangement of the hardware in the Model 2201A. The Model 2201A consists of seven main areas, including eight plug-in boards, ac-to-dc power section, the front panel assembly and the option-module section. The front panel assembly consists of the panel and two PCBs. To remove the assembly from the chassis, first unscrew the two screws in the top corners of the panel, then tilt the panel outward. Disconnect the 26-pin ribbon cable and lift the panel out of the groove in the bottom crossbar. It is reinstalled by reversing this procedure.

1.3.2. Main Printed Circuit Boards (PCBs)

The three large PCBs go in the center section behind the front panel. They can be installed in any order, although the following order is preferred.

1) Data Processor (10312798), top slot
2) Signal Controller (10310952), second slot
3) Signal Processor (10310873), third slot

1.3.3. DC-to-DC Converter

The front left section of the chassis contains the DC-to-DC Converter assembly. This assembly plugs into the small connector on the Interconnect PCB and is secured to the side panel by the thumbscrew on the power supply heatsink. Attach the assembly firmly to the side panel while power is applied.

1.3.4. Oscillator Control Card

The Oscillator Control Card is plugged into the Interconnect PCB in the right front section of the chassis. The Oscillator Control Card is long enough that it nearly touches the back of the front panel. This prevents it from being knocked out of the connector by a hard shock while the panel is in place.

1.3.5. Main Power Supply

The left rear section of the chassis contains the main power supply. This includes the ac-to-dc power supply, the external dc input, ac fuse, and dc circuit breakers.

NOTES:

REVISIONS				
ZONE	LTR	DESCRIPTION	DATE	APPD
	A	RELEASED	4/1/93	
	B	REVISED PER ECO 14180	10/5/93	
	C	REVISED PER ECO 14363	2/14/94	
	D	REVISED PER ECO 14464	4/25/94	

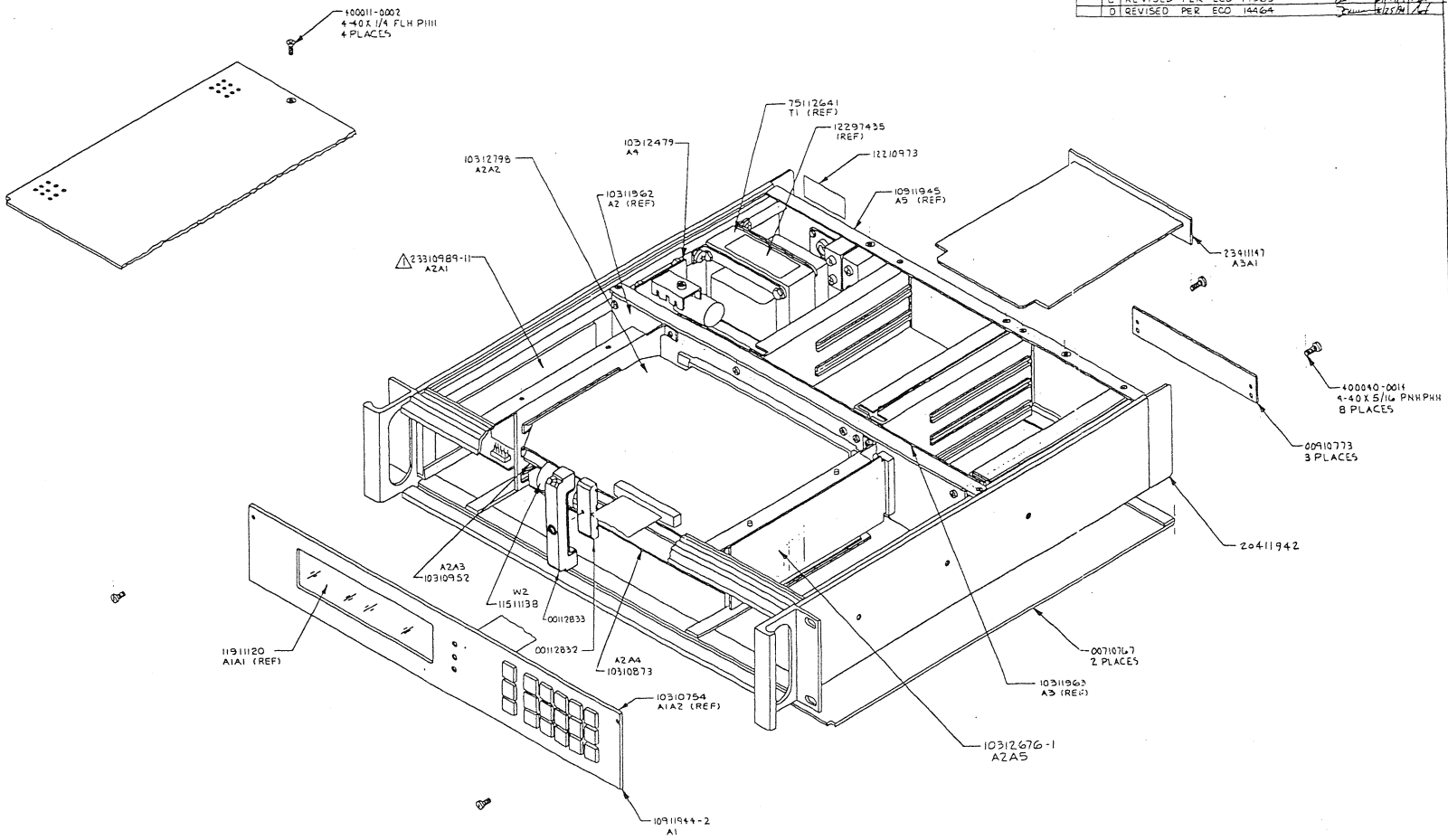

2. LOCATIONS OF P/N 520028-0200 (4 EA) & P/N 520029-0101 (10 EA) ARE INDICATED ON THE WIRE LIST P/N 12910977.

⚠ BEFORE INSTALLING POWER SUPPLY MODULE A2A1, APPLY A COATING OF THERMAL COMPOUND (REF 520025-0249), TO THE DC TO DC CONVERTERS SO THEY WILL MAKE GOOD THERMAL CONNECTION TO THE HEATSINK PLATE MOUNTED BELOW THE POWER SUPPLY MODULE.

NOTES:

NEXT ASSY	USED ON	REF DES	FIG NO
30411940	2201A		
APPLICATION			

TOLERANCES UNLESS OTHERWISE SPECIFIED: DECIMALS | FRACTIONS | ANGLES

MATERIAL:

Q.A. 3/17/94
ENGR 3/1/93
CHECKED 2/1/93
DRAWN 8 JUL 92

AUSTRON INC
AUSTIN, TEXAS

FINAL ASSY,
GPS RECEIVER

SIZE 4 | 7 | 25412779 | D

SCAL | SHEET 1 OF 1

1.3.6. I/O Modules

The center section at the rear of the chassis has slots for the I/O modules (top two slots, any order) and the Antenna Interface module (bottom slot). These modules are secured to the rear panel by two thumbscrews. A keying pin in the bottom right corner prevents modules which do not belong there from being accidentally installed.

1.3.7. Option Slots

The main option slots are located on the right side of the chassis at the rear. These three slots will accept any combination and any order of several different option modules. These slots are also keyed.

1.3.8. Covers

The top and bottom covers slide in grooves in the side panels and are secured by two screws at the rear. During normal operation, the covers should be in place and securely tightened. This reduces dust accumulation on the PCBs. It also reduces the amount of externally generated EMI (Electro Magnetic Interference) that could affect the operation of the Model 2201A, and reduce the amount of internally generated noise that could affect other equipment.

1.4. Circuit Descriptions

The following paragraphs describe in detail the various assemblies used in the Model 2201A. As you read through this section, refer to the figures indicated at the beginning of each discussion. Generally, signals are traced from left to right on the schematics, with inputs on the left and outputs on the right. When the discussions refer to digital signals, a high level (2.4 to 5 volts) is a logical ONE, and a low level (0.0 to 0.8 volt) is a logical ZERO.

NOTES:

1.4.1. Power Distribution and Interconnection (A2 and A3)

Reference Dwg. No. 12311947, Dwg. No. 10311962, Dwg. No. 12311962, Dwg. No. 10311963 and Dwg. No. 12311963

All PCBs and modules plug into one of two Interconnect PCBs. In addition, the Auxiliary Interconnect PCB is plugged into the Main Interconnect PCB. Power and signals are distributed around the instrument via these two Interconnect PCBs.

External ac and dc power enter the instrument through connectors J1 and J2, respectively, on the rear panel. AC power is current limited by fuse, F1, and dc power is limited by circuit breakers, CB1 and CB2. AC power is reduced in voltage in transformer, T1. The outputs of T1 are connected to E1 and E2 of the Power Input module (P/N 10312479).

The secondary of T1, connected to E1 and E2, produces an ac voltage that, when rectified and filtered, gives a voltage large enough to keep the receiver from drawing power from the dc power source while ac power is present. The secondary of T2 is also rectified and filtered to produce the unregulated dc power used by the receiver. The dc output of the Power Input module, E8 and E4, goes to the Power Supply module, P/N 23310989-01.

In the Power Supply module, the unregulated dc from the Power Input module is regulated to produce 5 volts, primarily used by the digital logic circuits, and 15 volts used by the analog circuits. The Power Supply module plugs into XA1 on the Main Interconnect PCB, through which regulated power is distributed to the rest of the receiver.

On the Power Supply module, slide switch, S1, is used to disable the 5 and ±15 volt outputs. It can be used to turn the receiver off without removing the external ac and dc power connections. To use this switch, remove the screws in the front panel and tilt it outward from the top. Before removing the ribbon cable, slide switch S1 to the OFF position. If it is necessary to remove the front panel from the rest of the unit (cable still attached) to get to the switch, be very careful not to touch the circuit boards on the back of the panel to any part of the chassis. Damage may be done to the panel on the receiver.

NOTES:

A	RELEASED	10-1-71	
B	REVISED PER ECO 13526	1-Nov-71	
C	REVISED PER ECO 13567	1-Nov-71	
D	REVISED PER ECO 13567	2-Dec-71	

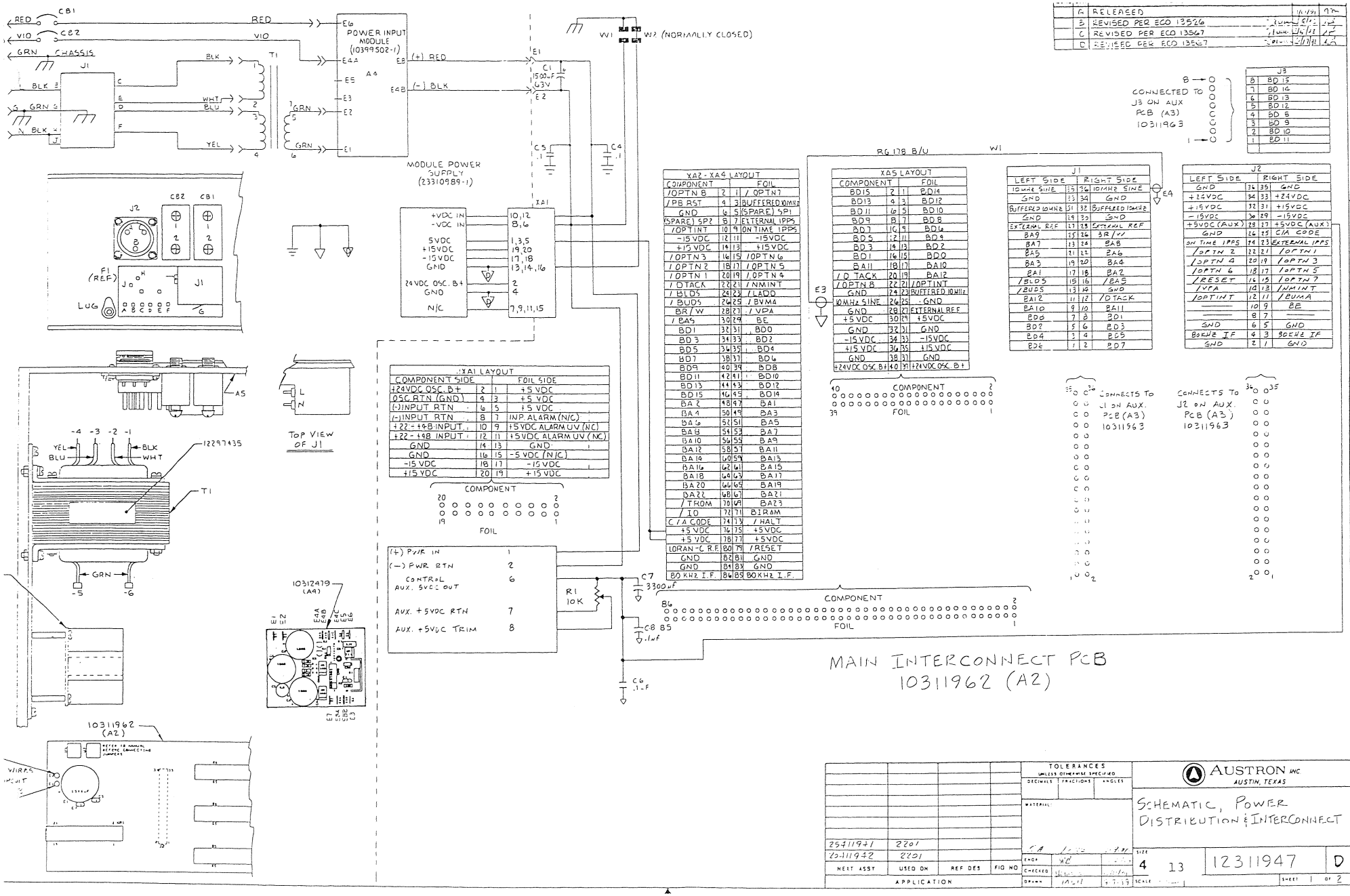

XA1 LAYOUT			
COMPONENT SIDE			FOIL SIDE
+24VDC OSC. B+	2	1	+5 VDC
OSC RTN (GND)	4	3	+5 VDC
(-) INPUT RTN	6	5	+5 VDC
(-) INPUT RTN	8	7	INP. ALARM (N/C)
+22 - +48 INPUT	10	9	+5 VDC ALARM UV (N/C)
+22 - +48 INPUT	12	11	+5 VDC ALARM UV (N/C)
GND	14	13	GND
GND	16	15	-5 VDC (N/C)
-15 VDC	18	17	-15 VDC
+15 VDC	20	19	+15 VDC

XA2 - XA4 LAYOUT			
COMPONENT			FOIL
/OPTN 8	2	1	/OPTN 7
/PB RST	4	3	BUFFERED 10MHz
GND	6	5	(SPARE) SP1
(SPARE) SP2	8	7	EXTERNAL 1PPS
/OPTINT	10	9	ON TIME 1PPS
-15 VDC	12	11	-15VDC
+15 VDC	14	13	+15VDC
/OPTN 3	16	15	/OPTN 6
/OPTN 2	18	17	/OPTN 5
/OPTN 1	20	19	/OPTN 4
/DTACK	22	21	/NMINT
/BUS5	24	23	/LADD
/BUS5	26	25	/BVMA
BR/W	28	27	/VPA
/BAS	30	29	BE
BD1	32	31	BD0
BD3	34	33	BD2
BD5	36	35	BD4
BD7	38	37	BD6
BD9	40	39	BD8
BD11	42	41	BD10
BD13	44	43	BD12
BD15	46	45	BD14
BA2	48	47	BA1
BA4	50	49	BA3
BA6	52	51	BA5
BA8	54	53	BA7
BA10	56	55	BA9
BA12	58	57	BA11
BA14	60	59	BA13
BA16	62	61	BA15
BA18	64	63	BA17
BA20	66	65	BA19
BA22	68	67	BA21
/TROM	70	69	BA23
/IO	72	71	BIRAM
C/A CODE	74	73	/HALT
+5 VDC	76	75	+5VDC
+5 VDC	78	77	+5VDC
LORAN-C R.F.	80	79	/RESET
GND	82	81	GND
GND	84	83	GND
80 KHZ I.F.	86	85	80KHZ I.F.

XA5 LAYOUT			
COMPONENT			FOIL
BD15	2	1	BD14
BD13	4	3	BD12
BD11	6	5	BD10
BD9	8	7	BD8
BD7	10	9	BD6
BD5	12	11	BD4
BD3	14	13	BD2
BD1	16	15	BD0
BA11	18	17	BA10
/D TACK	20	19	BA12
/OPTN 8	22	21	/OPTINT
GND	24	23	BUFFERED 10MHz
10MHz SINE	26	25	GND
GND	28	27	EXTERNAL REF
+5 VDC	30	29	+5VDC
GND	32	31	GND
-15VDC	34	33	-15VDC
+15 VDC	36	35	+15VDC
GND	38	37	GND
+24VDC OSC. B+	40	39	+24VDC OSC. B+

J1			
LEFT SIDE			RIGHT SIDE
10MHz SINE	35	36	10MHz SINE
GND	33	34	GND
BUFFERED 10MHz	31	32	BUFFERED 10MHz
GND	29	30	GND
EXTERNAL REF	27	28	EXTERNAL REF
BA9	25	26	BR/W
BA7	23	24	BA8
BA5	21	22	BA6
BA3	19	20	BA4
BA1	17	18	BA2
/BUS5	15	16	/BA5
/BUS5	13	14	GND
BA12	11	12	/DTACK
BA10	9	10	BA11
BD0	7	8	BD1
BD2	5	6	BD3
BD4	3	4	BD5
BD6	1	2	BD7

J2			
LEFT SIDE			RIGHT SIDE
GND	34	35	GND
+24VDC	34	33	+24VDC
+15VDC	32	31	+15VDC
-15VDC	30	29	-15VDC
+5VDC (AUX)	28	27	+5VDC (AUX)
GND	26	25	C/A CODE
ON TIME 1PPS	24	23	EXTERNAL 1PPS
/OPTN 2	22	21	/OPTN 1
/OPTN 4	20	19	/OPTN 3
/OPTN 6	18	17	/OPTN 5
/RESET	16	15	/OPTN 7
/VPA	14	13	/NMINT
/OPTINT	12	11	/BVMA
———	10	9	BE
———	8	7	———
GND	6	5	GND
80KHZ IF	4	3	80KHZ IF
GND	2	1	GND

(+) PWR IN			1
(-) PWR RTN			2
CONTROL AUX. 5VDC OUT			6
AUX. +5VDC RTN			7
AUX. +5VDC TRIM			8

MAIN INTERCONNECT PCB
10311962 (A2)

23411941	2201		
23-111942	2201		
NEXT ASSY	USED ON	REF DES	FIG NO
APPLICATION			

TOLERANCES UNLESS OTHERWISE SPECIFIED
DECIMALS | FRACTIONS | ANGLES
MATERIAL:

ENGR
CHECKED
DRAWN

AUSTRON INC
AUSTIN, TEXAS

SCHEMATIC, POWER DISTRIBUTION & INTERCONNECT

SIZE 4 | 13 | 12311947 | D
SCALE
SHEET 1 OF 2

REVISIONS				
ZONE	LTR	DESCRIPTION	DATE	APPD

OPTION SECTION

XA1 - XA3 LAYOUT

XA1	XA2	XA3			
		CHASSIS GND	2	1	CHASSIS GND
		BD14	4	3	BD15
		BD12	6	5	BD13
		BD10	8	7	BD11
		BD8	10	9	BD9
		/NMINT	12	11	/BAS
		BUFFERED 10MHZ	14	13	GND
		ON TIME 1PPS	16	15	GND
		/DTACK	18	17	GND
/OPTNSTB(1)	/OPTNSTB(2)	/OPTNSTB(3)	20	19	BR/W
		/VPA	22	21	SP14 (SPARE)
		/RESET	24	23	/OPTINT
		/BUDS	26	25	/BLDS
		BA12	28	27	/BVMA
		BD7	30	29	BE
		BD5	32	31	BD6
		BD3	34	33	BD4
		BD1	36	35	BD2
		BA11	38	37	BD0
		BA9	40	39	BA10
		BA7	42	41	BA8
		BA5	44	43	BA6
		BA3	46	45	BA4
		BA1	48	47	BA2
		+5VDC	50	49	+5VDC
		GND	52	51	GND
		−15VDC	54	53	−15VDC
		+15VDC	56	55	+15VDC
		GND	58	57	GND
		GND	60	59	GND

COMPONENT
60 ○○○○○○○○○○○○○○○○○○○○○○○○○○○○ 2
59 ○○○○○○○○○○○○○○○○○○○○○○○○○○○○ 1
FOIL

RF SECTION

XA4 - XA6 LAYOUT

XA4	XA5	XA6			
		GND	2	1	GND
		GND	4	3	GND
		+15VDC	6	5	+15VDC
		−15VDC	8	7	−15VDC
		+24VDC	10	9	+24VDC
		80KHZ IF	12	11	80KHZ IF
		GND	14	13	GND
		C/A CODE	16	15	C/A CODE
		GND	18	17	GND
		EXTERNAL REF	20	19	EXTERNAL 1PPS
		GND	22	21	GND
		BUFFERED 10MHZ	24	23	ON TIME 1PPS
		+5VDC	26	25	+5VDC
		GND	28	27	GND
		10MHZ SINE	30	29	10MHZ SINE
		GND	32	31	GND
		LORAN-C RF	34	33	LORAN-C RF
		CHASSIS GND	36	35	CHASSIS GND
		SP19 (SPARE)	38	37	/BVMA
		/OPTINT	40	39	/VPA
		BA9	42	41	BA10
		BA11	44	43	BR/W
		BA12	46	45	/BAS
		BA3	48	47	BA4
		BA1	50	49	BA2
/OPTNSTB(5)	/OPTNSTB(6)	/OPTNSTB(7)	52	51	/DTACK
		BD7	54	53	BD6
		BD5	56	55	BD4
		BD3	58	57	BD2
		BD1	60	59	BD0

COMPONENT
60 ○○○○○○○○○○○○○○○○○○○○○○○○○○○○ 2
59 ○○○○○○○○○○○○○○○○○○○○○○○○○○○○ 1
FOIL

E1 — W1 — E2

J1			
LEFT SIDE			RIGHT SIDE
10MHZ SINE	36	35	10MHZ SINE
GND	34	33	GND
BUFFERED 10MHZ	32	31	BUFFERED 10MHZ
GND	30	29	GND
EXTERNAL REF	28	27	EXTERNAL REF
BR/W	26	25	BA9
BA8	24	23	BA7
BA6	22	21	BA5
BA4	20	19	BA3
BA2	18	17	BA1
/BAS	16	15	/BLDS
GND	14	13	/BUDS
/DTACK	12	11	BA12
BA11	10	9	BA10
BD1	8	7	BD0
BD3	6	5	BD2
BD5	4	3	BD4
BD7	2	1	BD6

36 ○○ 35
○○
○○
○○
○○
○○
○○
○○
○○
○○
○○
○○
○○
○○
○○
○○
2 ○○ 1

CONNECTS TO J1 ON MAIN PCB (A2) 10311962

J2			
LEFT SIDE			RIGHT SIDE
GND	35	36	GND
+24VDC	33	34	+24VDC
+15VDC	31	32	+15VDC
−15VDC	29	30	−15VDC
+5VDC	27	28	+5VDC
C/A CODE	25	26	GND
EXTERNAL 1PPS	23	24	ON TIME 1PPS
/OPTN 1	21	22	/OPTN 2
/OPTN 3	19	20	/OPTN 4
/OPTN 5	17	18	/OPTN 6
/OPTN 7	15	16	/RESET
/NMINT	13	14	/VPA
/BVMA	11	12	/OPTINT
BE	9	10	———
———	7	8	———
GND	5	6	GND
80KHZ IF	3	4	80KHZ IF
GND	1	2	GND

35 ○○ 36
○○
○○
○○
○○
○○
○○
○○
○○
○○
○○
○○
○○
○○
○○
○○
1 ○○ 2

CONNECTS TO J2 ON MAIN PCB (A2) 10311962

J3	
8	BD15
7	BD14
6	BD13
5	BD12
4	BD8
3	BD9
2	BD10
1	BD11

○ ← 8
○
○
○
○
○
○
○ ← 1

CONNECTS TO J3 ON MAIN PCB (A2) 10311962

AUX INTERCONNECT PCB
10311963 (A3)

Back of System

SIZE			
4	15	12311947	D
SCALE		SHEET 2 OF 2	

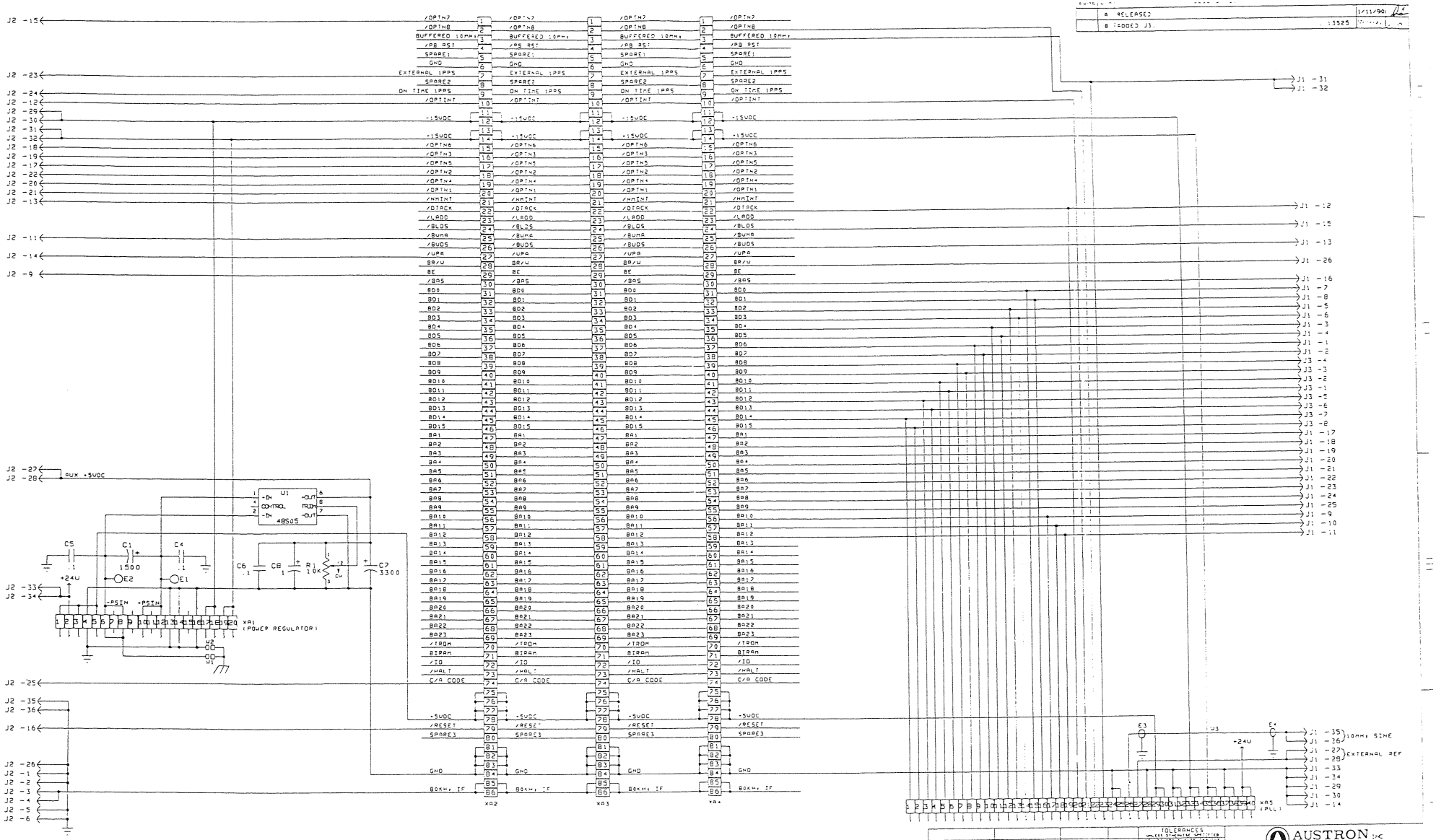

LAST USED REF			
J3	U3	E4	XA5
U1	C8	R1	

12311962	2221	1A2	
NEXT ASSY	USED ON		
APPLICATION			

TOLERANCES UNLESS OTHERWISE SPECIFIED

AUSTRON INC
A DATUM COMPANY

TITLE: SCHEMATIC, MAIN INTERCONNECT

SIZE A — 12311962 — REV B

SHEET 4 OF 17

1. ALL CAPACITOR VALUES ARE IN MICROFARADS.

NOTES: UNLESS OTHERWISE SPECIFIED

A	RELEASED		1/11/90
B	ADDED J3.	13525	

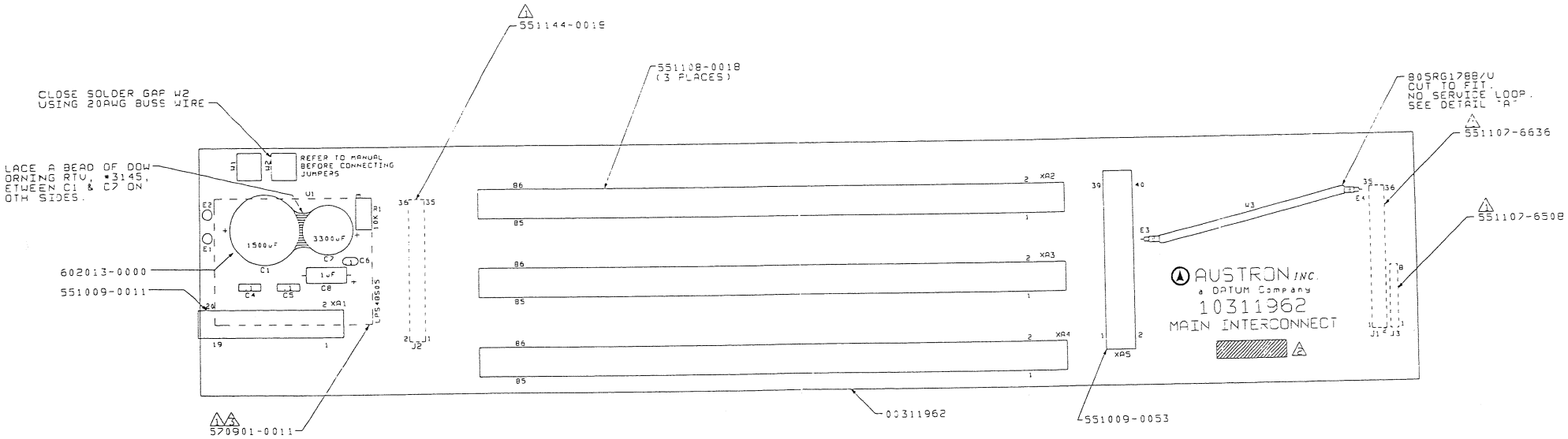

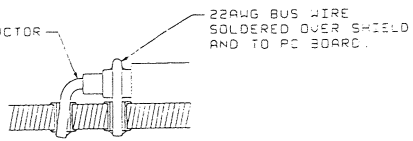

DETAIL "A"
(NOT TO SCALE)

NOTE:

3. INSTALL 510904-0039, ON 6 PINS, BETWEEN PCB AND MODULE.
2. MARK BOARD IN THE POSITION SHOWN WITH THE CURRENT REVISION OF THIS DRAWING.
1. MOUNT ON FAR SIDE AFTER WAVE SOLDER. HAND SOLDER AND CLEAN. MUST BE LEVEL ON PCB AND J1 & J3 MUST BE PARALLEL TO EACH OTHER.

APPLICATION			
NEXT ASSY	USED ON	REFERENCE DESIGNATOR	
11411943	2201	1A2	

TOLERANCES UNLESS OTHERWISE SPECIFIED
DO NOT SCALE THIS DRAWING
DECIMAL ± FRACTIONAL ± ANGULAR ±
MATERIAL
DRAWN DanW 8/18/89
CHECKED D. Gulewski 1/8/90
ENGINEER JR Bowell 1/8/90
M.E. Lopez 1/15/90

AUSTRON INC
a DATUM Company

TITLE
PCB ASSY,
MAIN INTERCONNECT

19

DRAWING NUMBER 10311962 REVISION B

CAD GENERATED

SHEET 1 OF 1

A	RELEASED		1/12/98
B	ADDED J3.	13524	

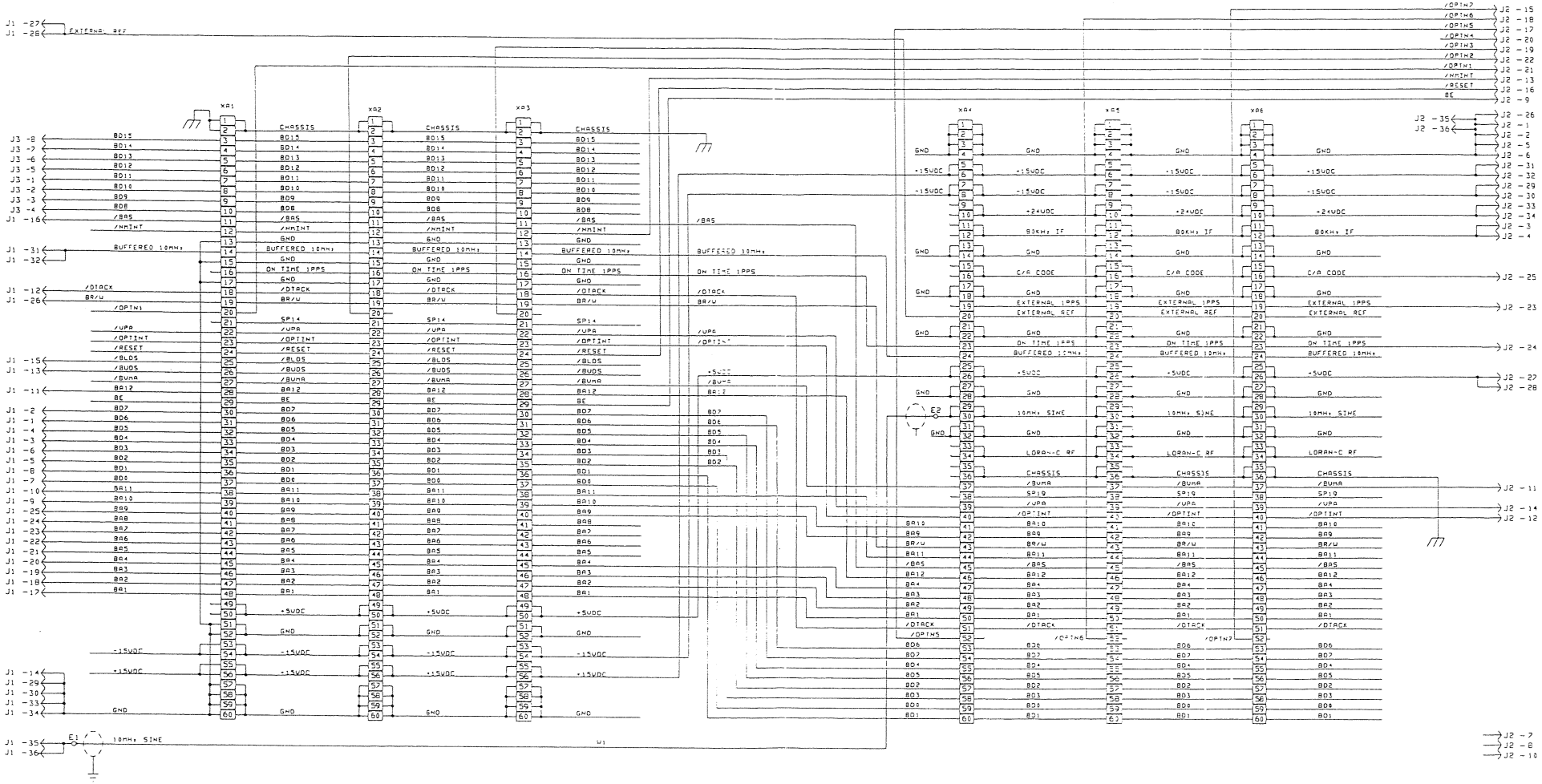

2. ALL CAPACITOR VALUES ARE IN MICROFARADS.
1. ALL RESISTOR VALUES ARE IN OHMS, 1/4W, 5%.
NOTES: UNLESS OTHERWISE SPECIFIED

TOLERANCES UNLESS OTHERWISE SPECIFIED
DECIMAL ± FRACTIONAL ± ANGLE ±

MATERIAL

AUSTRON INC
A DATUM COMPANY

TITLE
SCHEMATIC,
AUXILIARY INTERCONNECT

1031:963	8231	1A3	DRAWN B. Gutowski	8/31/89	
NEXT ASSY	USED ON	REFERENCE DESIGNATOR	FIGURE NUMBER	CHECKED B. Gutowski	1/12/98
				ENGINEER JR Bowell	1/13/98
				MFG Larry	1/15/98

APPLICATION

SIZE A | CAGE CODE | DRAWING NUMBER 12311963 | REV B
SCALE NONE | SHEET 4 OF 21
CAD GENERATED | SHEET 1 OF 1

8 7 6 5 4 3 2 1

	A	RELEASED			1/12/90
88	B	ADDED J3.	DanW	13524	11/6/89

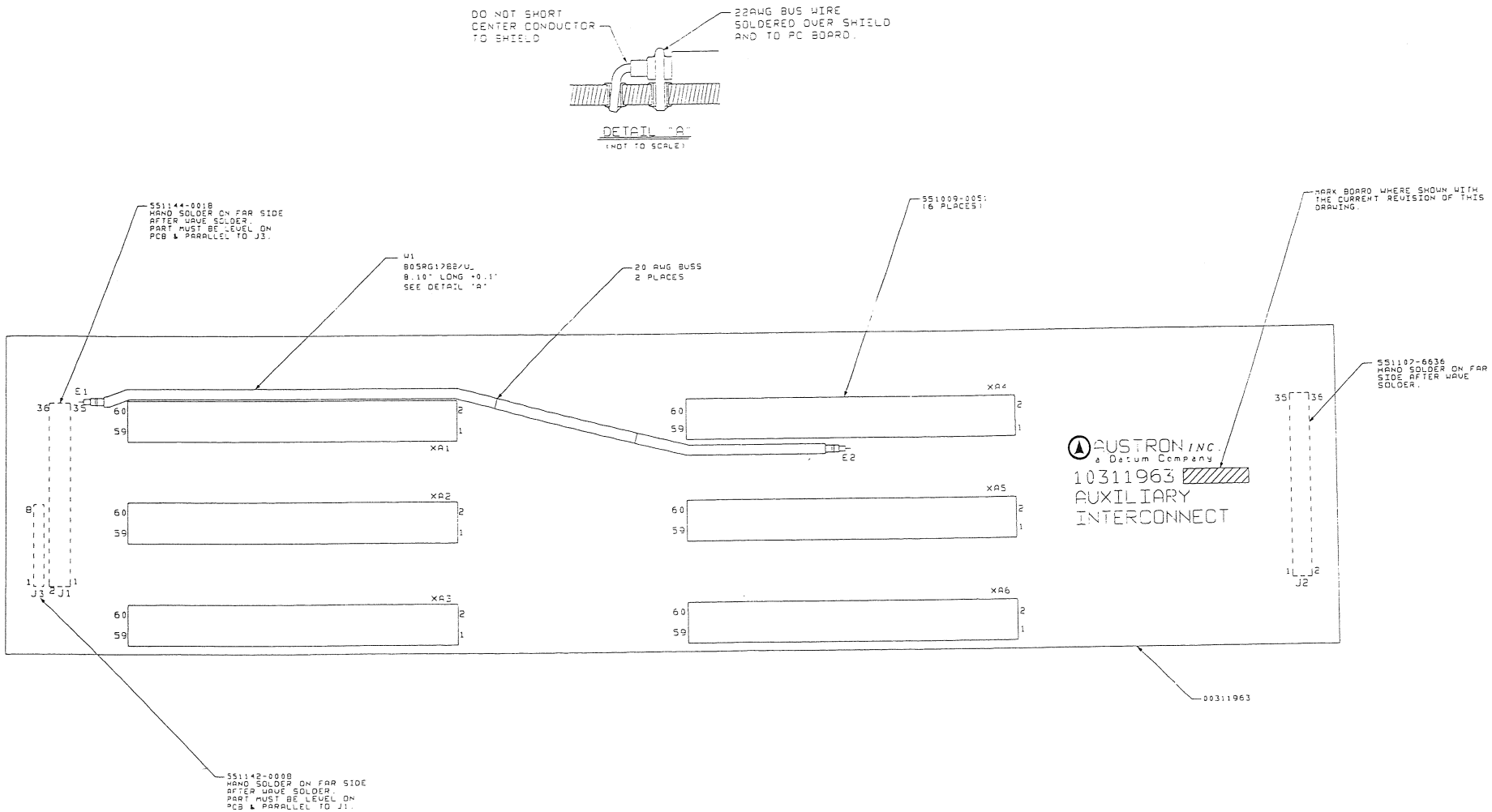

NEXT ASSY	USED ON	REFERENCE DESIGNATOR	FIGURE NUMBER
11411943	2201	1A3	

APPLICATION

TOLERANCES UNLESS OTHERWISE SPECIFIED

DRAWN DanW. 6/21/89
DESIGN D. Gulewski 1/12/90
CONTROL JR Bowell 1/11/90
LAYER 1/15/90

AUSTRON INC
a DATUM COMPANY

TITLE PCB ASSY, AUXILIARY INTERCONNECT

SIZE 4 | DRAWING NUMBER 10311963 | REV B

23 | PAD GENERATED | SHEET 1 OF 1

1.4.2. Power Supply Module (A2A1)

Reference Dwg. No. 23310989-*, Dwg. No. 10310979-*, Dwg. No. 12310979, Dwg. No. 12312479, Dwg. No. 10312479

The power supply is made up of two sections. A power input section switches between ac and dc voltage supplies. A second section, the Power Supply module, supplies a variety of dc voltages. Together these sections allow operation from a wide variety of power sources, including referencing either dc input polarity to chassis ground.

The power input circuit consists of an ac power transformer, bridge rectifier and auto switchover circuit. If an ac source is applied to J1, the switchover circuit will select the rectified ac and block any dc source connected to J2. Upon the failure or removal of the ac source, the switchover circuit will select the external dc source connected to J2.

The Power Supply module operates on an input range of 22 to 57 Vdc. Regulated output voltages are produced by dc-to-dc converters. These voltages consist of 5 Vdc and ±15 Vdc. The power supply outputs are disabled by switch, S1, if desired.

NOTES:

REVISIONS				
ZONE	LTR	DESCRIPTION	DATE	APPD
	A	RELEASED	1-27-87	CRL
	B	P/L REVISED PER ECO 10624 D7	2-10-87	CRL
	C	REVISED PER ECO 12765	1/10/92	[illegible]
	D	REV PER ECO 12990 MLN	9/22/92	[illegible]
	E	REVISED PER ECO 13008 D7	6/24/93	HLW
	F	REVISED PER ECO 14351	1/11/94	[illegible]

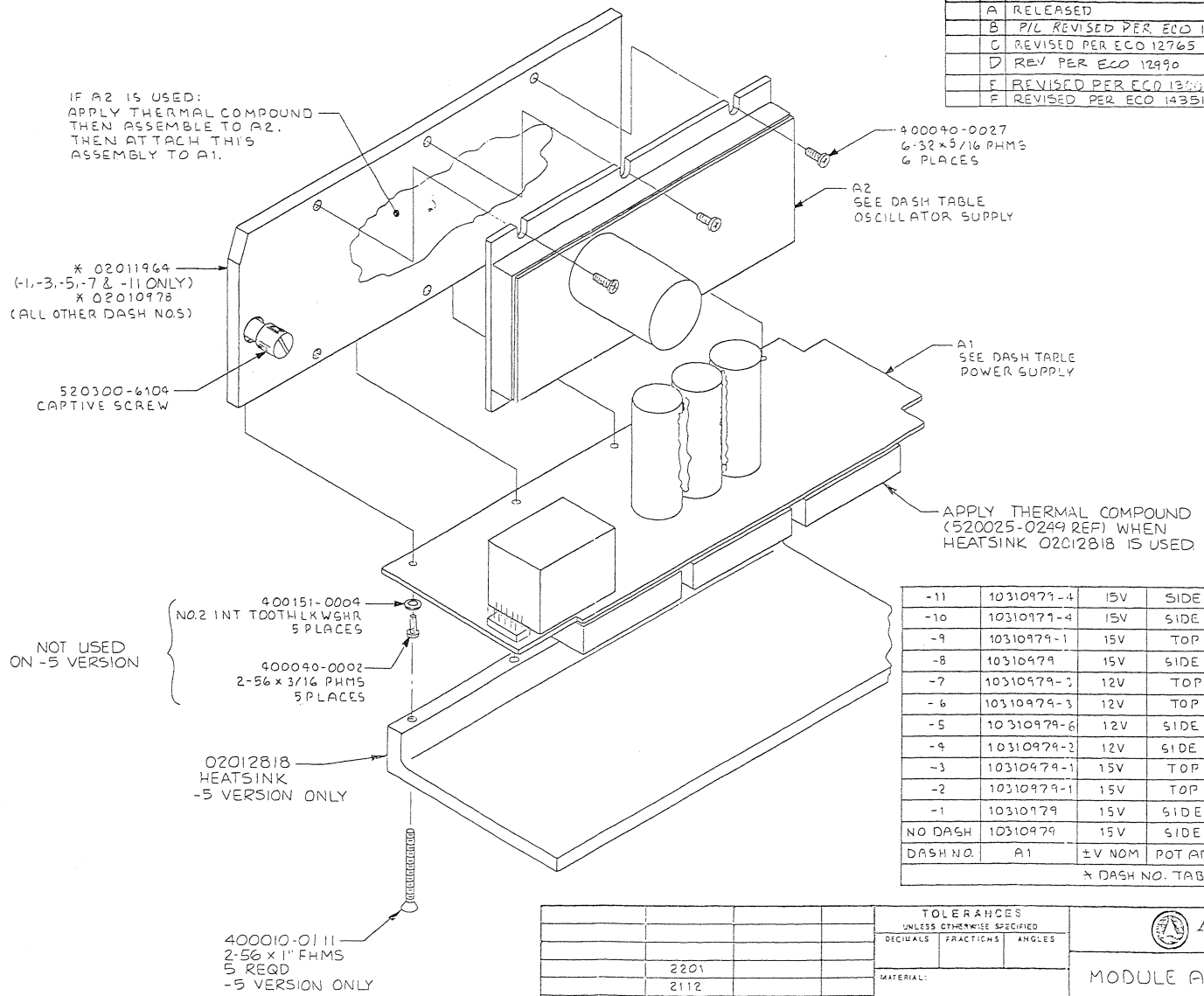

DASH NO.	A1	±V NOM	POT ADJ	A2	NOM OSC V
-11	10310979-4	15V	SIDE	NOT USED	—
-10	10310979-4	15V	SIDE	10310988	24V
-9	10310979-1	15V	TOP	10310988-3	15
-8	10310979	15V	SIDE	10310988-2	15
-7	10310979-2	12V	TOP	NOT USED	—
-6	10310979-3	12V	TOP	10310988-1	24
-5	10310979-6	12V	SIDE	NOT USED	—
-4	10310979-2	12V	SIDE	10310988	24
-3	10310979-1	15V	TOP	NOT USED	—
-2	10310979-1	15V	TOP	10310988-1	24
-1	10310979	15V	SIDE	NOT USED	—
NO DASH	10310979	15V	SIDE	10310988	24

* DASH NO. TABLE

NEXT ASSY	USED ON	REF DES	FIG NO
	2201		
	2112		
	2110B		
25410972	2200	1A2A1	
	2110		
11410821	2310		

APPLICATION

TOLERANCES UNLESS OTHERWISE SPECIFIED
DECIMALS | FRACTIONS | ANGLES

MATERIAL:

Q.A.	[illegible]	1-27-87
ENGR	CE	27 Jan 87
CHECKED	CRL	1-27-87
DRAWN	[illegible]	1/5/87

AUSTRON INC.
AUSTIN, TEXAS

MODULE ASSY-
POWER SUPPLY

SIZE 3 | C 27 | 23310989 * | F

SCALE NONE | SHEET 1 OF 1

REV: G

REVISIONS					
ZONE	LTR	DESCRIPTION	ECO NO.	DATE	APVD
	A	RELEASED		12/19/86	CRL
	B	REVISED PER ECO 10536 CRL		1/19/87	DG
D/E,D	C	DELETED R3,270;ADDED 3-470 OHM R SO.m W	10569	5/13/87	CRL
	D	R3,R12 & R13 WERE 470 Ohm JFM	11423	2/5/88	CRL
	E	DEL C14 & C16 FROM CSC SUPPLY JFM	11804	7/19/88	CRL
	F	CHGD DASH CHART,DWG NO. WAS 12310979•	12230	1/11/89	CRL
	G	REVISED PER ECO.	14349	12/24/94	

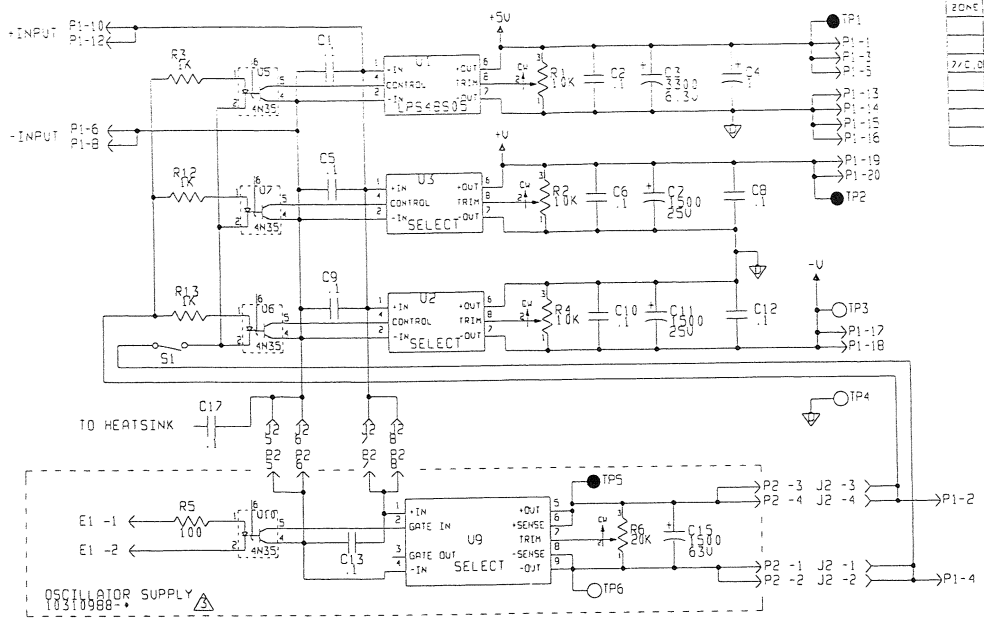

-7	48S12	48S12	12	TOP	NOT USED
-6	48S12	48S12	12	SIDE	NOT USED
-5	48S15	48S15	15	TOP	NOT USED
-4	48S15	48S15	15	SIDE	NOT USED
-3	48S12	48S12	12	TOP	INSTALLED
-2	48S12	48S12	12	SIDE	INSTALLED
-1	48S15	48S15	15	TOP	INSTALLED
NO DASH	48S15	48S15	15	SIDE	INSTALLED
DASH NO.	U2	U3	+/-V	POT ADJ	BL SUP

10310979• DASH NUMBER SCHEDULE

4. REFERENCE DESIGNATORS NOT USED: C14, C16.
3. OSCILLATOR SUPPLY IS OPTIONAL. SEE DASH NO. TABLE ON 23310989 FOR USAGE.
2. ALL CAPACITOR VALUES ARE IN MICROFARADS.
1. ALL RESISTOR VALUES ARE IN OHMS, 1/4W, 10%.

NOTES: UNLESS OTHERWISE SPECIFIED
NOTES: UNLESS OTHERWISE SPECIFIED

NEXT ASSY	USED ON	REFERENCE DESIGNATOR	FIGURE NUMBER
10310979•	2200		
10310979•	2110		
10310979•	2310		

APPLICATION

TOLERANCES UNLESS OTHERWISE SPECIFIED
DO NOT SCALE THIS DRAWING
DECIMAL ± FRACTIONAL ± ANGULAR ±
MATERIAL

DRAWN: JOHN MILLIKIN DATE 12/18/86
CHECKED: CW LANCASTER DATE 1/11/89
TM-ENGR: CE DATE 11JAN89
D.C.: LOPEZ DATE 1/11/89

AUSTRON INC
a DATUM company

TITLE
SCHEMATIC, MODULAR SUPPLY.

SIZE 3 | 29 | DRAWING NUMBER 12310979 | REVISION G
SCALE - - | CAD GENERATED | Sheet 1 of 1

-7	48S12	48S12	12	TOP	NOT USED
-6	48S12	48S12	12	SIDE	NOT USED
-5	48S15	48S15	15	TOP	NOT USED
-4	48S15	48S15	15	SIDE	NOT USED
-3	48S12	48S12	12	TOP	INSTALLED
-2	48S12	48S12	12	SIDE	INSTALLED
-1	48S15	48S15	15	TOP	INSTALLED
NO DASH	48S15	48S15	15	SIDE	INSTALLED
*DASH NO.	U2	U3	+/-V	R1,R2,R3	BL SUP

DASH TABLE

REVISIONS

ZONE	LTR	DESCRIPTION		ECO NO.	DATE	APVD
	A	RELEASED			12/18/86	CRL
	B	REVISED PER ECO	CRL	10536	1/19/87	DG
	C	ADDED R12 AND R13	DONW	10869	5/12/87	CRL
	D	UPDATED PER ECO	JFM	11423	1/19/88	CRL
	E	PARTS LIST CHANGE ONLY	JFM	11752	5/10/88	CRL
	F	ARTWORK CHANGES	JFM	11859	7/19/88	CRL
	G	REVISED PER ECO.	DH	14349	18 JAN 94	Sorum

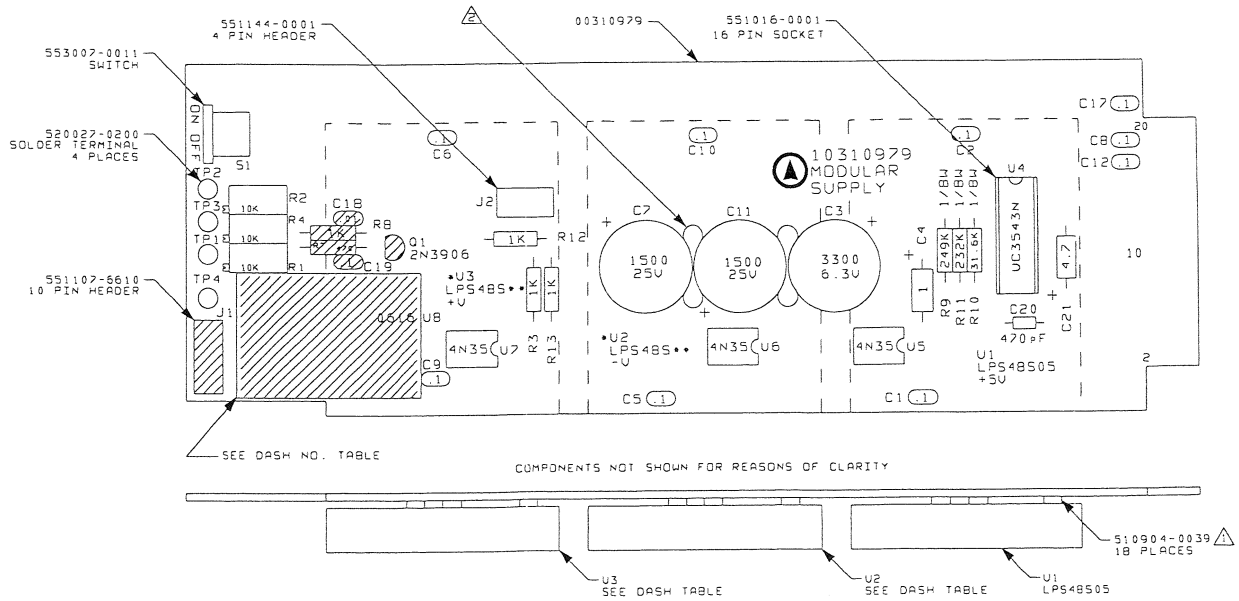

23310989*	2310		
15410972	2200		
23310989*	2110		
NEXT ASSY	USED ON	REFERENCE DESIGNATOR	FIGURE NUMBER

APPLICATION

TOLERANCES UNLESS OTHERWISE SPECIFIED
DO NOT SCALE THIS DRAWING
DECIMAL ± FRACTIONAL ± ANGULAR ±

MATERIAL

DRAWN: JOHN MATTHEWS DATE 12/5/86
CHECKED: CR LANCASTER DATE 7/19/88
ENGINEER: CE DATE 19JUL88
B.C. LOPEZ DATE 7/19/88

AUSTRON INC
A DATUM COMPANY

TITLE
PCB ASSY,
MODULAR SUPPLY

SIZE 3 | DRAWING NUMBER 10310979* | REVISION G
SCALE | CAD GENERATED | Sheet 1 of 1

△2 PLACE A BEAD OF DOW CORNING RTV NO.3145 BETWEEN C7 & C11 AND C11 & C3 CAPACITOR CASES ON BOTH SIDES FOR MECHANICAL SUPPORT.

△1 PLACE A GLASS BEAD OVER EACH LEAD OF LPS MODULES BEFORE MOUNTING TO PCB.

NOTES: UNLESS OTHERWISE SPECIFIED

31